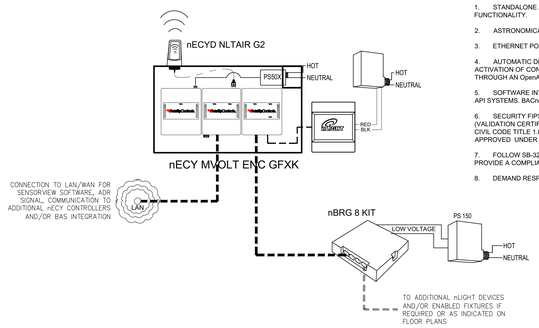

NETWORK CONTROLLER INCLUDES THE FOLLOWING CAPABILITIES:

1. STANDALONE AND NETWORKED nLIGHT SYSTEM FUNCTIONALITY.
2. ASTRONOMICAL TIME CLOCK VIA SENSORVIEW SOFTWARE.
3. ETHERNET PORT TO CONNECT TO LAN/WAN NETWORK.
4. AUTOMATIC DEMAND RESPONSE (ADR) CLIENT THAT ALLOWS ACTIVATION OF CONFIGURABLE LOAD SHED DIMMING LEVELS THROUGH AN OpenADR 2.0a VIRTUAL END NODE.
5. SOFTWARE INTEGRATION FOR BAC+ET IP/MSTP BAS OR REST API SYSTEMS. BACnet TESTING LABORATORIES LISTED B-BC.
6. SECURITY FIPS PUBLICATION 140-2, LEVEL 1 INSIDE (VALIDATION CERTIFICATE PENDING). COMPLIES WITH CALIFORNIA CIVIL CODE TITLE 1.81.26, SECURITY OF CONNECTED DEVICES, APPROVED UNDER SENATE BILL NO. 327 (2018).
7. FOLLOW SB-327 END-USER AUTHENTICATION PROCESS TO PROVIDE A COMPLIANT SB-327 SYSTEM.
8. DEMAND RESPONSE READY DEVICE.

1 nLIGHT BACKBONE NETWORK DETAIL

N.T.S.

ROOM TYPE	OCCUPANCY SENSOR: OCCUPANCY MODE (AUTO ON)	VACANCY MODE	DUAL TECHNOLOGY	OCCUPIED LEVEL (%)	PARTIAL OFF: TIME OF LAST DETECTED OCCUPANCY (MINUTES)	PARTIAL OFF: UNOCCUPIED DIM LEVEL(%)	OCCUPANCY TIME DELAY (MINUTES)	TIME CLOCK: SCHEDULE ON TIME	SCHEDULE OFF TIME	SCHEDULE OVERRIDE SWITCH	WALL SWITCH: MANUAL (ON/OFF)	MANUAL DIMMING	KEY SWITCH	SCENE CONTROL	DAYLIGHT SENSOR: DIMMING (IF APPLICABLE)	OTHER: PLUG LOAD CONTROL (IF APPLICABLE)	NOTES
BREAKROOMS/KITCHENS	X		X	100	7.5	10	10				X	X			X	X	
CLASSROOMS	X		X	70	7.5	10	10				X	X		X	X		
CONFERENCE ROOMS	X		X	70	7.5	10	10				X	X		X	X	X	
COPY ROOMS	X		X	70	7.5	10	10				X	X			X	X	
CORRIDORS/STAIRWELLS	X			100	7.5	50	10*				X	X	X		X		
EXTERIOR				100				DUSK	DAWN								***
LABS	X		X	100	17.5	10	20				X	X			X		
MULTIPURPOSE ROOMS	X		X	70	7.5	10	10				X	X			X		
OPEN OFFICE AREAS	X		X	100	7.5	10	10				X	X			X	X	
PARKING GARAGE	X			100	10	50	12.5				X	X			X		
RESTAURANTS/STORES				100		10		TBD	TBD	X	X	X		X	X		**
RESTROOMS	X		X	70	7.5	10	10				X	X	X		X		
SMALL OFFICES < 250 SQ FT	X		X	70	7.5	10	10				X	X			X	X	
STORAGE ROOMS > 100 SQ FT	X			100	7.5	10	10				X	X			X		
WAREHOUSES	X			100	10	50	12.5	TBD	TBD		X	X			X		

NOTES:

* DURING OPERATIONAL HOURS THE LIGHTING DIM LEVEL WILL GO TO 50% AFTER 7.5 MINUTES OF NO OCCUPANCY. OUTSIDE OF OPERATIONAL HOURS THE DIM LEVEL WILL GO TO 50% AFTER 7.5 MINUTES OF NO OCCUPANCY, AND THEN AFTER A TOTAL OF 10 MINUTES OF NO OCCUPANCY THE LIGHTS WILL TURN OFF. OWNER TO VERIFY TIME SCHEDULES.

** 5 MINUTES BEFORE THE LIGHTING IS SCHEDULED TO TURN OFF, THE LIGHTS WILL TURN OFF FOR 1 SECOND AND THEN GO BACK TO IT'S PREVIOUS DIMMING LEVEL. THIS BLINK WARNING PREVENTS FALSE OFFS AND GIVES AUTHORIZED PERSONNEL A WARNING TO PRESS WALL SWITCH TO ACTIVATE A 2-HOUR OVERRIDE. OWNER TO VERIFY TIME SCHEDULES.

*** AUTOMATIC SCHEDULING CONTROLS SHALL BE CAPABLE OF REDUCING THE LIGHTING BETWEEN 50% AND 90% AND HAVE A MINIMUM OF TWO NIGHTTIME PERIODS. DIMMING CONTROLLED AT FIXTURE LEVEL, USING NLIGHT AIR WIRELESS LIGHTING COTNROLS WILL NOT REQUIRE 0-10V DIMMING WIRES TO BE PULLED THROUGH THE LCP, PER SECTION 130.2(c)2(A).

2 SEQUENCE OF OPERATION / BASIS OF DESIGN TABLE

N.T.S.

GENERAL NOTES:

1. DETAILS AND DESIGN IS BASED ON AN nLIGHT LIGHTING CONTROLS SYSTEM.
2. DETAILS ARE DIAGRAMMATIC AND FOR REFERENCE OF SYSTEM AND ROOM TYPE REQUIREMENTS TO MEET BASIS OF DESIGN. REFER TO MANUFACTURERS SHOP DRAWINGS FOR QUANTITIES AND DEVICES USED FOR EACH SPACE AND NETWORK.
3. LIGHTING CONTROL SUBMITTALS FOR NETWORKED SYSTEM SHALL INCLUDE THE FOLLOWING DOCUMENTS(NOT LIMITED TO FOLLOWING):
   - 3.1. SHOP DRAWINGS SHOWING QUANTITY AND LOCATION OF ALL DEVICES.
   - 3.2. STANDALONE/NETWORK SINGLE LINE DIAGRAM.
   - 3.3. BASIS OF DESIGN PROGRAMMING OPERATION FOR EACH ROOM TYPE.
   - 3.4. DEVICE CUTSHEETS.
4. MANUFACTURER OR FACTORY REPRESENTATIVE TO INCLUDE STARTUP AND COMMISSIONING OF THE LIGHTING CONTROL SYSTEM. MUST INCLUDE A SITE VISIT FOR THE FOLLOWING:
   - 4.1. A PRE-CONSTRUCTION MEETING TO CONFIRM DESIGN AND FIELD INSTALLATION REQUIREMENTS.
   - 4.2. PROGRAMMING AND COMMISSIONING OF THE LIGHTING CONTROL SYSTEM TO MEET THE BASIS OF DESIGN AND TITLE 24 REQUIREMENTS.
   - 4.3. MAINTENANCE / OWNER WALK THROUGH FOR MAKING FINAL ADJUSTMENTS TO PROGRAMMING.
5. CONTRACTOR SHALL FURNISH AND INSTALL ALL LIGHTING CONTROL DEVICES, CABLES, ACCESSORIES AS REQUIRED BY MANUFACTURER'S RECOMMENDATION TO PROVIDE A COMPLETE AND FULLY FUNCTIONAL COMPLIANT TITLE 24 SYSTEM.
6. ALL DEVICES SHALL BE MOUNTED AND INSTALLED IN ACCESSIBLE CEILING LOCATIONS. CONTRACTOR WILL VERIFY BEST FIT LOCATIONS IN THE FIELD.
7. CONTRACTOR TO VERIFY COMPATIBILITY BETWEEN DIMMING POWERPACKS AND INSTALLED FIXTURES.
8. CONTACT SDLA FOR COMPLETE nLIGHT LIGHTING CONTROLS BOM, CONTROLS@SDLTG.COM - PHONE # 858-505-1055.

TITLE 24 COMPLIANCE:

1. MANUAL AREA CONTROLS, **SECTION 130.1(a)**.
2. MULTI-LEVEL LIGHTING CONTROLS, **SECTION 130.1(b)**.
3. SHUT-OFF CONTROLS, **SECTION 130.1(c)**.
4. AUTOMATIC DAYLIGHTING CONTROLS, **SECTION 130.1(d)**.
5. DEMAND RESPONSE CONTROLS, **SECTION 130.1(e)** AND **SECTION 110.2(i)**.
6. CONTROLS INTERACTIONS, **SECTION 130.1(f)**.
7. CIRCUIT CONTROLS FOR 120-VOLT CONTROLLED RECEPTACLES, **SECTION 130.5(d)**.
8. INDOOR LIGHTING CONTROLS BASIS OF DESIGN (SEE SDLA BASIS OF DESIGN TO COMPLY WITH T24), **SECTION 120.8(c)**.
9. CONTACT SDLA FOR COMPLETE nLIGHT LIGHTING CONTROLS BOM, CONTROLS@SDLTG.COM - PHONE # 858-505-1055.

SYSTEM OPERATIONS TRAINING OPTIONS, PER SECTION 120.8(h):

1. 2-HOUR ONSITE OR REMOTE TRAINING.
2. 2-DAY IN PERSON OR REMOTE TRAINING @ SDLA, AT CUSTOMER LOCATION, OR VIDEOCONFERENCING SOFTWARE.
3. VIDEO TRAINING GIVEN TO EVERYONE WHO PARTICIPATES IN THE 2-DAY IN PERSON OR REMOTE TRAINING.
4. CONTACT SDLA FOR TRAINING, CONTROLS@SDLTG.COM - PHONE # 858-505-1055.

GRAPHIC VISUALIZATION FLOORPLAN INTERFACES:

1. SYSTEM SHALL PROVIDE WEB-BASED VISUALIZATION INTERFACE THAT DISPLAYS GRAPHICAL FLOORPLANS.
2. GRAPHICAL FLOORPLAN SHALL OFFER THE FOLLOWING TYPES OF SYSTEM VISUALIZATION:
   - 2.1. FULL DEVICE OPTIONS - A MASTER GRAPHIC OF ENTIRE BUILDING, BY FLOOR, SHOWING EACH CONTROL DEVICE INSTALLED IN THE PROJECT WITH ZONES OUTLINE. THIS SHALL INCLUDE, BUT NOT BE LIMITED TO, THE FOLLOWING:
     - 2.1.1. CONTROLS EMBEDDED LIGHT FIXTURES, CONTROLS DEVICES NOT EMBEDDED IN THE FIXTURES, DAYLIGHT SENSORS, OCCUPANCY SENSORS, WALL SWITCH/DIMMERS, SCENE CONTROLLERS, NETWORK RELAYS, NETWORK BRIDGES, CENTRALIZED SYSTEM CONTROLLERS, WIRE RELAY PANELS, AND GROUP OUTLINES.
   - 2.2. GROUP ONLY OPTION - A MASTER GRAPHIC OF THE ENTIRE BUILDING, BY FLOOR, SHOWING ONLY CONTROL GROUPS OUTLINED.
   - 2.3. ALLOW FOR PAN AND ZOOM COMMANDS SO SMALLER AREAS CAN BY DISPLAYED ON A LARGER SCALE SIMPLY BY PANNING AND ZOOMING EACH FLOOR'S MASTER GRAPHIC.
   - 2.4. A MOUSE CLICK ON ANY CONTROL DEVICE SHALL DISPLAY THE FOLLOWING INFORMATION (AS APPLICABLE):
     - 2.4.1. THE DEVICE CATALOG NUMBER, THE DEVICE NAME AND CUSTOM LABEL, DEVICE DIAGNOSTIC INFORMATION, INFORMATION ABOUT THE DEVICE STATUS OR CURRENT CONFIGURATION AVAILABLE WITH AN ADDITIONAL MOUSE CLICK
   - 2.5. CUSTOMIZATION TOOLS INCLUDING WIDGET FOR DEVICE STATUSES AND OVERRIDING DIM LEVELS, HEAT MAP SHOWING DIM LEVEL OR OCCUPANCY, CALLOUTS, TOGGLES, AND WEATHER.
   - 2.6. FEATURES INCLUDING SYSTEM SCHEDULING, ALARM MONITORING, REPORT CUSTOMIZATION, AND PLAYBACK.
3. CONTACT SDLA FOR GRAPHIC VISUALIZATION FLOORPLAN INTERFACES, CONTROLS@SDLTG.COM - PHONE # 858-505-1055.

LIGHTING CONTROLS LEGEND AND DESCRIPTIONS

- OS — EXTENDED RANGE 360° SENSOR-CEILING MOUNT, LOW VOLTAGE, PASSIVE DUAL TECHNOLOGY (PDT). DETECTION TECHNOLOGY SHALL BE SELECTABLE AS FOLLOWS: PIR/MICROPHONICS/BOTH. OS - nCM PDT 10 RJB
- DS — AUTOMATIC DIMMING CONTROL PHOTOCELL- CEILING MOUNT, LOW VOLTAGE. DS - nCM ADCX RJB
- DP a — 16 AMP (120/227V) POWER/RELAY PACK WITH 0-10V DIMMING CONTROL, CHASE NIPPLE MOUNTING. DP - nPP16 D EFP. SUBSCRIPT REFERENCES CIRCUIT/ZONE OF CONTROL
- PL a — 20 AMP (120V) RELAY PACK FOR PLUG LOAD CONTROL, CHASE NIPPLE MOUNTING. PL - nPP20 PL. SUBSCRIPT REFERENCES CIRCUIT/ZONE OF CONTROL
- PCD a — 5 AMP (120/227V) POWER/RELAY PACK PHASE DIMMING CONTROL, CHASE NIPPLE MOUNTING (277V NOT AVAILABLE WITH ELV). PCD - nSPS PCD (0V, 3W, MLV, ELV 120). SUBSCRIPT REFERENCES CIRCUIT/ZONE OF CONTROL
- S1 a, S2 a,b, S4 a,b,c,d — LOW VOLTAGE ON/OFF TOGGLE SWITCH WITH DIMMING. 1-ZONE = S1 - nPODM DX; 2-ZONE = S2 - nPODM 2P DX; 4-ZONE = S4 - nPODM 4P DX. SUBSCRIPT REFERENCES ZONE OF CONTROL
- SS2, SS4 — LOW VOLTAGE SCENE SELECTOR WITH DIMMING. 2-SCENE = SS2 - nPODM 4S DX; 4-SCENE = SS4 - nPODM 4S DX. SUBSCRIPT REFERENCES ZONE OF CONTROL
- GFX a — LOW VOLTAGE GRAPHIC TOUCHSCREEN CONTROLLER, INCLUDES 16-ZONES AND 16-SCENES WITH DIMMING. GFXX - nPODGFX. SUBSCRIPT REFERENCES ZONE OF CONTROL
- WS a — LOW VOLTAGE WALL SWITCH OCCUPANCY SENSOR WITH ON/OFF/RAISE/LOWER, PASSIVE DUAL TECHNOLOGY (PDT). WS - nWSX PDT LV DX. SUBSCRIPT REFERENCES ZONE OF CONTROL

SB-327 SPECIFICATION REQUIREMENTS:

1. **SENATE BILL No. 327** - LIGHTING CONTROLS MUST COMPLY WITH CALIFORNIA CIVIL CODE 1.81.26.
2. **GENERATION OF AUTHENTICAION** - THE DEVICE MUST CONTAIN A SECURITY FEATURE THAT REQUIRES A USER TO GENERATE A NEW MEANS OF AUTHENTICATION BEFORE ACCESS IS GRANTED TO THE DEVICE FOR THE FIRST TIME.
3. **AUTHENTICATION** - METHOD OF VERIFYING OF A USER, PROCESS, OR DEVICE TO ACCESS RESOURCES IN A INFORMATION SYSTEM.
4. **SECURITY FEATURE** - A FEATURE OF A DEVICE DESIGNED TO PROVIDE SECURITY FOR THAT DEVICE. U.S. GOVERNMENT STANDARD OF FEDERAL INFORMATION PROCESSING STANDARD (FIPS) 140-2, LEVEL 1 COMPLIANT.

SB-327 AUTHENTICATION PROCESS:

1. REQUIRES 3 POINTS OF CONTACT - FACILITIES DEPARTMENT, OWNER'S REP, AND IT DEPARTMENT (EMAIL AND CONTACT PHONE #).
2. REQUIRES 2 DATES FOR SCHEDULING.
3. INTEGRATION REQUIREMENTS (IP ADDRESS, SUBNET MASK, AND GATEWAY).
4. CONTACT SDLA FOR AUTHENTICATION SETUP, CONTROLS@SDLTG.COM - PHONE # 858-505-1055.

BUILDING MANAGEMENT SYSTEMS INTEGRATION SPECIFICATIONS:

1. BACnet TESTING LABORATORIES (BTL) LISTED AS A BACnet BUILDING CONTROLLER (B-BC).
2. OPTIONAL AUTOMATIC DEMAND RESPONSE CLIENT OPTION ALLOWS ACTIVATION OF CONFIGURABLE LOAD SHED DIMMING LEVELS THROUGH AN OpenADR 2.0a VIRTUAL END NODE. REQUIRES OUTBOUND IP CONNECTION TO UTILITY DRAS.
3. ENHANCED SECURITY PROVIDED BY BOTH:
   - 3.1. HTTPS SERVER
   - 3.2. U.S. GOVERNMENT SECURITY STANDARD OF FEDERAL INFORMATION PROCESSING STANDARD (FIPS) PUBLICATION 140-2, LEVEL 1, INSIDE (VALIDATION CERTIFICATE PENDING).
4. CONTACT SDLA FOR INTEGRATION WITH BMS, CONTROLS@SDLTG.COM - PHONE # 858-505-1055.

nLIGHT REST API SPECIFICATIONS:

ACUITY BRANDS SYSTEM - nLIGHT CONTROLLER SHALL BE COMPATIBLE WITH REST API OVER AN ENCRYPTED HTTPS CONNECTION. READ AND WRITE CONNECTION SHALL BE SECURABLE WITH A USERNAME/PASSWORD PAIR. PASSWORDS TO HAVE ADJUSTABLE COMPLEXITY TO COMPLY WITH CUSTOMER PASSWORD REQUIREMENTS

1. WRITE ACCESS OF END DEVICES CONNECTED TO THE SYSTEM CONTROLLER SHALL BE MADE AVAILABLE THROUGH:
   - 1.1. WRITE ACCESS SHALL INCLUDE COMMAND OF DEVICE-RELAY-STATE, DEVICE-DIM-LEVEL, GROUP-RELAY-STATE, AND GROUP-DIM-LEVEL.
   - 1.2. GROUPING OF DEVICES FOR GROUP-RELAY-STATE AND GROUP-DIM-LEVEL WRITE ACCESS SHALL BE AUTOMATICALLY GENERATED BY THE SYSTEM CONTROLLER AND SHALL NOT REQUIRE CREATION BY THIRD PARTY SYSTEMS.
   - 1.3. GROUP-RELAY-STATE AND GROUP-DIM-LEVEL RESPONSE TO REST API SHALL BE AVAILABLE WITHOUT REQUIRING MULTIPLE POST COMMANDS.
2. READ ACCESS OF END DEVICES (EMBEDDED nLIGHT FIXTURES) CONNECTED TO THE SYSTEM CONTROLLER SHALL BE MADE AVAILABLE THROUGH:
   - 2.1. READ ACCESS SHALL INCLUDE DEVICE-ONLINE/OFFLINE STATUS, DEVICE-OCCUPANCY-STATE, GROUP-OCCUPANCY-STATE, MEASURED-LIGHT-LEVEL, DEVICE-RELAY-STATE, DEVICE-DIM-LEVEL, GROUP-RELAY-STATE, AND GROUP-DIM-LEVEL
   - 2.2. GROUP OF DEVICES FOR GROUP-OCCUPANCY-STATE, GROUP-RELAY-STATE, AND GROUP-DIM-LEVEL READ ACCESS SHALL BE AUTOMATICALLY GENERATED BY THE SYSTEM CONTROLLER AND SHALL NOT REQUIRE CREATION BY THIRD PARTY SYSTEMS.
3. CONTACT SDLA FOR SETUP OF RESPI CONTROLS@SDLTG.COM - PHONE # 858-505-1055.

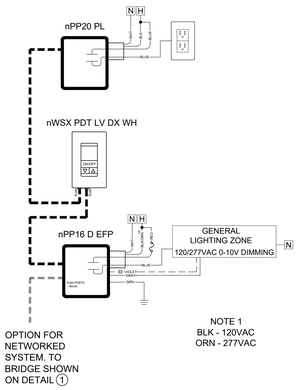

3 SMALL OFFICE DETAIL

N.T.S.

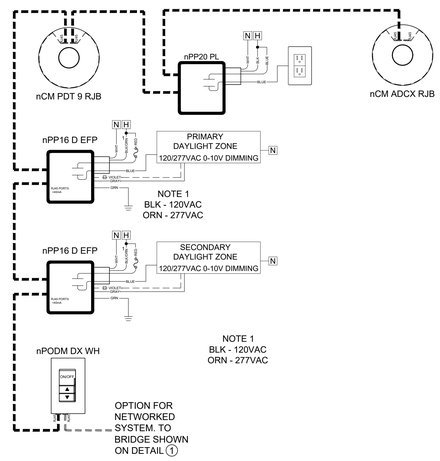

4 LARGE OFFICE DETAIL

N.T.S.

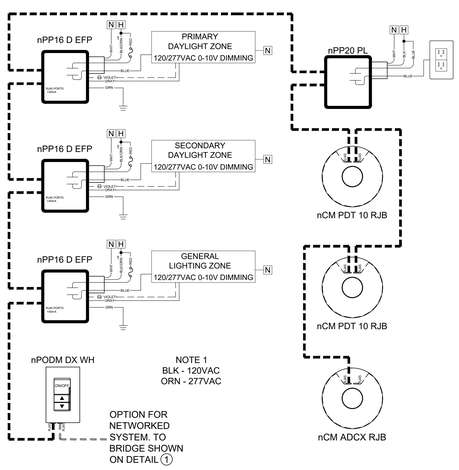

5 OPEN OFFICE DETAIL

N.T.S.

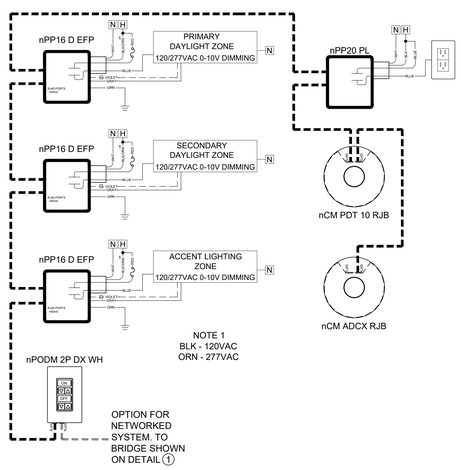

6 CONFERENCE DETAIL

N.T.S.

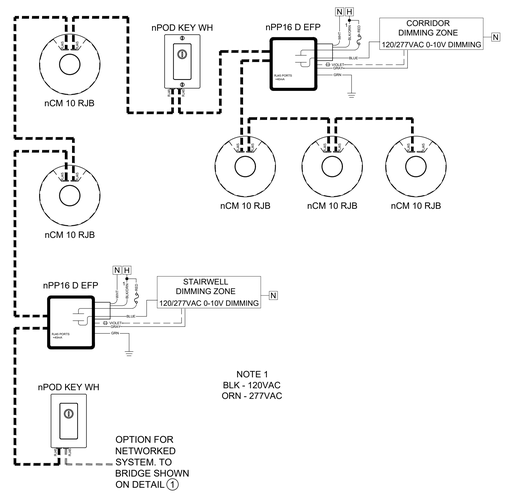

7 CORRIDOR/STAIRWELL DETAIL

N.T.S.

SDLA San Diego Lighting Associates

PROJECT NAME

CITY, STATE (PROVINCE)

DRAWING TYPE:
CONTROL LAYOUT\ SUBMITTAL

REV	DATE

Date: XX/XX/2015
Scale: NOT TO SCALE
Drawn By: CNC
Quote #: XXXXX
DWG Ref:
Sheet: DETAILS

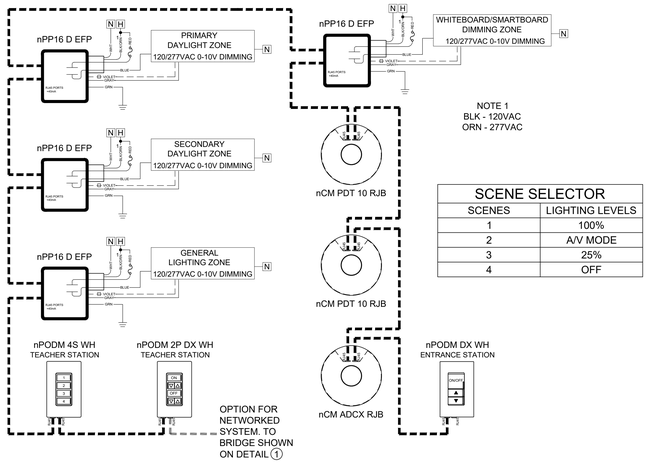

SCENE SELECTOR	
SCENES	LIGHTING LEVELS
1	100%
2	A/V MODE
3	25%
4	OFF

8 CLASSROOM DETAIL
N.T.S.

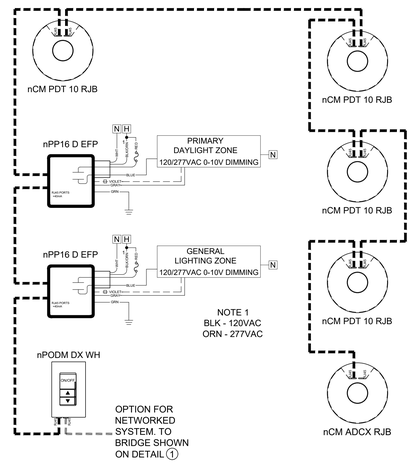

9 LAB DETAIL
N.T.S.

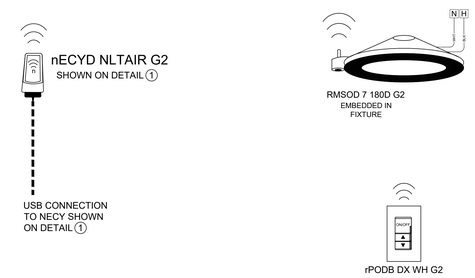

10 GARAGE DETAIL
N.T.S.

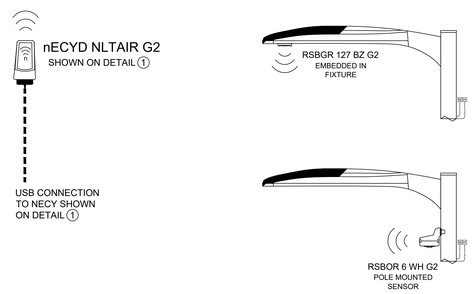

11 EXTERIOR DETAIL A
N.T.S.

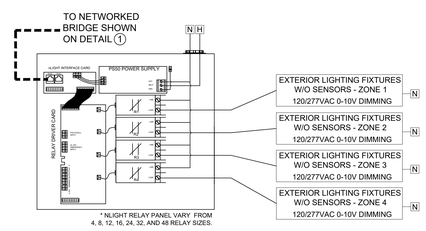

12 EXTERIOR DETAIL B
N.T.S.

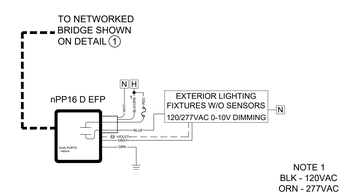

13 EXTERIOR DETAIL C
N.T.S.

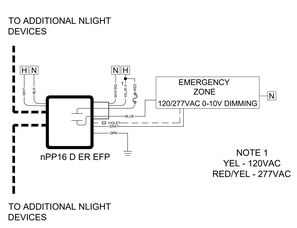

11 EMERGENCY POWERPACK TYPICAL
N.T.S.

SDLA
San Diego Lighting Associates

PROJECT NAME
CITY, STATE (PROVINCE)

DRAWING TYPE:
CONTROL LAYOUT \ SUBMITTAL

REV	DATE

Date: XX/XX/2015
Scale: NOT TO SCALE
Drawn By: CNC
Quote #: XXXXX
DWG Ref:

Sheet:
DETAILS (2)